PAUL SCHERRER INSTITUT

The "Generic VME PMC Carrier Board": A Common Digital Hardware Platform for Beam Diagnostics and Feedbacks at PSI

B. Keil, R. Kramert, P. Pollet, C. Buehler, P.-A. Duperrex, U. Greuter,
V. Schlott, N. Schlumpf, PSI, Villigen, Switzerland

Abstract:

Rapid progress in digital electronics allows the digitization of monitor signals at a very early stage of the signal processing chain, providing optimum performance and maximum flexibility for today's accelerator instrumentation. While the analog front-ends of such systems are usually specific for each monitor type, the subsequent digital part of the processing chain can be unified for many different measurement tasks. The "generic VME PMC Carrier board" (VPC) was developed to achieve this unification at the PSI electron and proton accelerator diagnostics and fast data acquisition and feedback systems. The core of the VME64x board consists of two Virtex2Pro FPGAs with two PowerPCs each, a floating point DSP and RAM. The FPGAs can acquire and process measurement data from the VMEbus P0/P2 connectors or from two application-dependent PMC mezzanine modules. Two 2 GBaud fibre optics transceivers may also be used to aquire or distribute measurement data. Envisaged applications include digital beam position (DBPM) and current monitors for proton beams, data processing for a muon decay experiment, and general beam diagnostics as well as global feedbacks at SLS accelerators and beamlines.

Motivation

PSI Diagnostics Section: Several New Projects

- **Beam profile & position measurement @ new PROSCAN proton therapy cyclotron**
- **New digital proton BPMs @ PSI ring cyclotron**
- **LEG (Low Emittance Gun) diagnostics**
- **Femtosecond beam slicing diagnostics @ SLS**
- **SLS beam diagnostics performance upgrades**
- **Cooperation with other PSI sections: Detector readout for PSI muon decay experiment**
- **Participation in CARE program & X-FEL project: RF control & fast beam stabilisation tests**

Generic Data Acquisition/Processing Solution

- **Customized monitor front-end electronics for each application**
- **Same VMEbus-based digital back-end electronics for all applications**
  - **Data processing (filters, ...), decimation, analysis with FPGA & processors**
  - **Generic control system interface (VME)**
  - **Support commercial (PCI PMC) & user-defined front-end interfaces**
  - **Feedback-ready: Gigabit fiber optics**

Implementation

Hardware Concept

- Implement as much as possible in FPGAs
- Shift complexity from hardware to FPGA firmware
- Virtex2Pro FPGAs: System-on-a-chip:
  - 2 PowerPC 405 processors
  - 8 multi-gigabit transceivers
  - Some 100 kByte dedicated RAM, clock DLLs, ...
- Separate FPGA firmware in 2 FPGAs:
  - "System FPGA": Generic firmware (VME, PCI, ...)
  - "User FPGA": Application-dependent firmware (DBPM, ...)
  - Advantages: Safety & reliability (upgrades, timing, ...), ...

Hardware Features

- 2 Virtex2Pro FPGAs
- "Sharc" floating point DSP, 3 MByte ext. SRAM
- Max. 16 MByte ZBT RAM
- Firmware in compact flash card
- 2 PMCs, PCI 64 bit/66 MHz or user-defined bus
- VME64x live insertion, 2eSST (320 MByte/s max.)
- 2 fiber optics transceivers, 2 GBaud
- Monitor-frontend interface: PMC or VME P0/P2 backplane

FPGA Firmware & Software Concept

"User FPGA":
- User-defined firmware, different for each application
- Standardized Interface to "System FPGA":
  - FIFO-based transfer of large data streams (5 Rocket IOs)
  - Random access of "User FPGA" registers, ... (32-bit bus)

"System FPGA":
- Generic firmware, VHDL, identical for all applications
- Modular: On-chip bus with independent interface modules
- Generic control system interface (VMEbus)
- Generic EPICS control system software: C++ base class, with derived classes for different diagnostics applications

"User FPGA" Firmware: *Application-Dependent* (DBPM, ...)

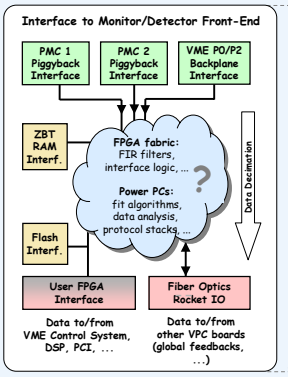

"VPC" VMEbus Board

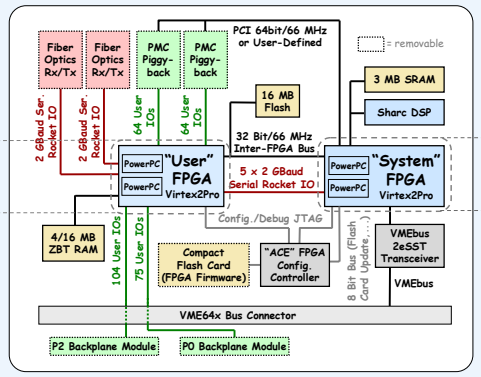

"System FPGA" Firmware: *Generic*

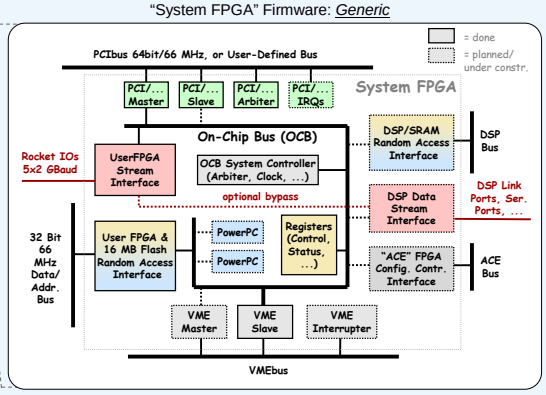

Status and Perspectives

Status

Since May 2004, VPC prototypes and a first version of the generic System FPGA firmware are available to in-house VPC users for tests of their front-ends, as well as an example firmware design for the User FPGA. An EPICS driver was developed in order to perform hardware/firmware long-term tests that have so far all been successful, e.g. tests of VMEbus interface, Inter-FPGA bus, Rocket IOs, 2 GBaud fiber optic links and flash memory.

Applications in 2004/2005

In 2004/2005, more than 300 VPC boards will be used in various experiments throughout PSI. Main applications are new proton DBPMs for the PSI ring cyclotron, beam profile monitors for the PROSCAN proton therapy project, the replacement of DSP boards in the SLS booster, and data acquisition for a muon decay experiment using a PMC with a new low-cost 8-channel 4 GSample/s waveform sampling chip (``domino chip") that was developed at PSI.

Example Application: proton DBPM

One of the first applications of the VPC board is a digital proton beam BPM that will be used for several transfer lines of the PSI ring cyclotron. The signals of four beam position pickups are amplified and filtered by an analog RF front-end. A VMEbus P2 backplane module digitizes the signals and performs digital downconversion, filtering and decimation. The VPC board performs additional filtering, position calculation and analysis, automatic gain control, calibration, data storage in the ZBT RAM, interlock functions, data integrity checks, and data transfer to the control system.

pDBPM VME backplane module

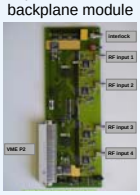

VPC Board: First Prototype